Ecodesign of Alpine Skis and other Sport Equipment - Considering Environmental Issues in Product Design and Development

Wimmer, W., Ostad-Ahmad-Ghorabi,H.

Abstract

This paper shows how to achieve environmental improvements of sport equipment. Two case studies are presented. For an alpine ski a classical product redesign is shown using available methods and tools. For a new Golf Swing Analyzer it is shown how to integrate Ecodesign in a new product development without having a reference product to evaluate.

*This is the final accepted manuscript of the paper originally published in: Wimmer, W., Ostad-Ahmad-Ghorabi,H. Ecodesign of Alpine Skis and other Sport Equipment - Considering Environmental Issues in Product Design and Development. The Impact of Technology on Sport II, Taylor & Francis Group, (2007), p.15-23; ISBN: 978-0-415-45695-1

1 Introduction

Product innovations are essential in a globalized market. Delivering a unique selling proposition can be realized by developing eco-products. A rising awareness about the environmental performance of products leads to competitive advantage for those having eco-products on the market. Ecodesign is a way to achieve competitive advantage. Ecodesign is a methodology for the design of products minimizing each product's environmental impact through all of its life cycle stages and life cycle costs respectively. The basis for eco-product development is a good analysis through Life Cycle Thinking (LCT). By applying LCT all life cycle stages of a product are evaluated aiming at finding environmental improvement potentials. Table 1 lists the different life cycle stages. In this paper these five life cycle stages will be considered to obtain Ecodesign improvement strategies for sport equipments.

2 Product improvement

In the following an alpine ski will be taken as a case study to demonstrate the product improvement approaches and strategies. In a first step the product structure has to be understood. Figure 1 shows a cross-section of such an alpine ski.

The bottom of the ski consists of a PE running surface (4), which is bonded to a laminate and framed by a wraparound steel edge (5). The interior of the ski is injected with foam (10), which constitutes the shape of the ski and ensures bonding of all components with each other. The graphic design of the ski is printed to the inner side of the transparent foil of the top surface (1). For reinforcement the inner side of this foil is bonded to a lattice (8). In the tip, center and tail areas the ski features a wide-meshed plastic inlay (9) between foil (1) and wood core (3), which is fixed to the laminate (2) by means of an adhesive lattice (17). In the tip area the wood core has been

replaced by an ABS plastic layer (not shown). At the tail of the ski, running surface, steel edge, and shell meet in the tail protector.

2.1 Product life cycle data

To obtain life cycle data for alpine skis a reference ski was taken into account, which weighs 1.8kg. 35% of the weight comes from the wraparound steel edges, 20% from the wood core and 10% from the surface foil. The rest are mostly glues, foams, rubbers and fleece used for assembling the ski. The manufacturing stage consists of the following steps:

1. Preparing parts and components: The steel edges are scoured and sandblasted. The foils which are delivered in reels are cut and the waist shape is milled.
2. Printing the surface: The foils are printed by screen printing technique.
3. Pressing process: The prepared parts and components are put and pressed together. The pressure for this process amounts 5bar and the required temperature is $120°C$.
4. Grinding: Different parts of the ski are grinded.

Further, it is assumed that for distribution a lorry is used and that the distribution distance is 1000km of average and shrinking foil is used for packaging. In the use stage of the alpine ski additional materials are needed such as wax. The end of life stage of the reference alpine ski is modeled to be a mixture of incineration to gain back energy and material recycling.

2.2 Environmental evaluation and environmental profile

To obtain an environmental profile of the alpine ski and to be able to extract Ecodesign strategies for product improvement, the "Ecodesign Toolbox" developed at the Vienna University of Technology (VUT) was applied [9]. The

Ecodesign Toolbox is a six step approach which leads to green product concepts. The six steps are: product description, process analysis, product analysis, stakeholder analysis, process & product improvement and Green Product Concept according to Figure 2.

The product description of the alpine ski and the process analysis was briefly introduced in 2.1. The stakeholder analysis prepares environmental laws and regulations for product development. The Ecodesign Product Investigation, Learning and Optimization Tool for Sustainable Product Development (PILOT) is a tool which was developed at the VUT [5, 11]. The PILOT can be used online to achieve an environmental profile of a product. The environmental profile is derived by asking specific product data of the life cycle stages of a product and calculating via energy values as environmental impact indicators. By assigning energy values to the different materials and processes through the entire life cycle of the alpine ski, materials and processes contributing significantly to environmental impact can be tracked. The environmental profile of the alpine ski is shown in Figure 3.

Figure 3 clearly shows that the first two life cycle stages, namely raw materials and manufacture, contribute most to the environmental impact of the alpine ski. The modeled distribution scenario or the use stage contribute little to the environmental impact of the product.

2.3 Product improvement strategies

Following the next step of the Ecodesign Toolbox, product and process improvement strategies shall be obtained by using the Ecodesign checklists of the PILOT [12]. For the ski manufacturer a special version of the PILOT has been developed providing ski-specific Ecodesign issues and checklists for each stage in the company's specific product development process. Figure 4 shows the PILOT which is adapted to skis.

Applying the Ecodesign SKI-PILOT results in the design strategies and design improvements listed in Table 2.

In a following step the achieved design improvements had been evaluated against cost saving potential and later those improvements resulting in an environmental improvement and in a cost reduction have been selected for implementation. All in all this procedure can be integrated in any continuous improvement process of a company.

3 Product development process

In some cases there are no reference products. The question is then how to deal with environmental issues in such product development tasks. The product development process can be seen as an optimization in between sometimes conflicting targets. Finding a certain material for a certain price to fulfill a certain function is difficult enough. Now adding the environmental dimension (e.g. considering the energy to produce the material but also considering the recycling behavior of the material) additionally may become challenging. Common to most development processes is a certain sequence of developing product specifications first, then deriving the functional structure and using creativity techniques to develop several possible product concepts before one concept is selected for embodiment design through an evaluation and assessment procedure, see Figure 5.

Introducing environmental thinking in the early phase of product development is most important. When laying down the product specifications environment should be on board already. The environmental target values sorted out shall be understood by the design team. This is essential in order to come up with a good overall environmental performance of a product. But the question is how to derive the correct environmental targets for a certain product? This should be demonstrated with the new development of a Golf

Swing Analyzer.

3.1 Understanding the environmental impacts

In case of a newly developed product, estimations of potential impacts along the product's life cycle have to be done. This goes together with defining the system boundaries for the product and its interactions with the environment. Relevant questions are how far those upstream processes, until the product leaves the manufacturer, should be considered and how the use phase and end of life phase are modeled. In general a Material, Energy and Toxicity (MET) matrix is a good way to develop an environmental overview of a product - even with vague data. For the new development of the Golf Swing Analyzer the MET-matrix showed that either the materials used in the device or the energy needed to operate will have the main environmental influence. Manufacturing processes or distribution (transport and packaging) but also end of life will have minor impacts only. Regarding the materials, the Golf Swing Analyzer (basic outline of components) consists of an Aluminum housing containing two lenses, an electronic control unit and some connecting cables. To work properly a tripod is needed. Out of these components the electronic control unit is environmentally most significant. One design task was to keep it as small as possible. The other design task is to have a robust but light weight housing and tripod. The energy supply side is a more challenging task since there are more options to choose. Assuming the device (as many other devices as well) could be operated with batteries or alternatively with rechargeable batteries.

Based on the assumptions that the Golf Swing Analyzer will be used from a golf club intensively on a driving range around 120 uses per year are realistic. Each use consists of a half hour training. Two scenarios are generally available to deliver the energy needed: Regular alkaline batteries, NiMH rechargeable batteries with external power supply unit. A third possibility applies in the case of the Golf Swing Analyzer. Since operating requires a

Laptop for storing and calculating the measurements of the recorded golf swing the idea of using USB power supply came up. The environmental evaluation given in Figure 6 shows clearly which one is the best solution.

3.2 Understanding environmental regulations

Additionally to the environmental evaluation of a product several environmental directives have to be considered in the development of electronic sport equipment. Those are the Directive for the Restriction of the use of certain Hazardous Substances [3] and the Directive on Waste Electrical and Electronic Equipment [1] as well as the new and upcoming EuP-Directive setting Ecodesign requirements for energy-using products [2] EuP is currently under development but will bring Ecodesign requirements to be fulfilled in order to achieve CE-marking of a product. Evidence for the compliance with the directive is the CE marking on the product through conformity assessment. The assessment can be made either through internal design control or integration into the Environmental Management and Audit Scheme (EMAS) with the design function included within the scope of that registration. RoHS restricts the use of cadmium, lead, mercury, hexavalent chromium, and two bromated flame retardants. WEEE requires achieving a certain recycling percentage at the end of life of a product [7].

3.3 Developing Green Product Concepts

Summarizing the above considerations in the early stage of product development the environmental situation of the product becomes clearer and design targets can be set in the beginning of the product development process:

- Low energy consumption through USB supply
- Light weight design

- Lead free soldering and RoHS compliant components
- Design for recycling and recycling instructions according to WEEE

3.4 Communicating the environmental performance

Once product improvements and a better environmental performance has been achieved the market needs to be informed about these achievements. A credible way of documenting the environmental performance is needed. There are several possibilities available to do so. International standard [8] foresees three types: Doing self declared environmental declarations, applying for an existing eco - labeling program or developing an Environmental Product Declaration. For the B2B market more and more companies are developing Environmental Product Declarations [4]. Documenting the environmental performance this way sets in principle the target values for the next redesign of the product - aiming at a better environmental performance.

4 Conclusion

What is needed in order to achieve a competitive advantage through Ecodesign is a full integration of environmental issues into the product development process. This requires staff training to the mostly new issue of understanding key environmental performance indicators in product development, this further requires company database for material and processes to do Life Cycle Thinking of products. Additionally appropriate Ecodesign methods combined with a new creativity are needed to enable eco-product development. At the end environmental communication is needed to market the eco-products and to ensure competitive advantage through Ecodesign. Two examples have been provided in this paper - many more are available to learn from others and to find an own way of getting ready for the future challenges of achieving a good environmental performance of products.

References

[1] Directive 2002/96/EC of the European parliament and of the council of 27 January 2003 on waste electrical and electronic equipment (WEEE).

[2] Directive 2005/32/EC of the European Parliament and of the council of 6 July 2005 establishing a framework for the setting of Ecodesign requirements for energy-using products. Technical report.

[3] Directive 2002/95/EC Of The European Parliament and of the Council of 27 January 2003 on the restriction of the use of certain hazardous substances in electrical and electronic equipment (RoHS). 2003.

[4] ECODESIGN company . *http://www.ecodesign-company.com/solutions*, Accessed 15 April, 2007.

[5] Ecodesign Pilot. *www.ecodesign.at/pilot*, Accessed 18th of April, 2007.

[6] Ecodesign.at. Ecodesign PILOTs Assistant. *http://www.ecodesign.at/assist*, Accessed: 15th of June, 2007.

[7] Ecodesign.at. EEE validity check. *http://www.ecodesign.at/pilot/eeg*, Accessed: 18th of April, 2007.

[8] ISO. *ISO 14020- Environmental labels and declarations - General principles*. CEN (European Committee for Standardisation), 2000.

[9] R. Pamminger, W. Wimmer, M. Huber, and H. Ostad-Ahmad-Ghorabi. The ecodesign toolbox for the development of green product concepts–first steps for product improvement. In *Conference Proceedings of Going Green–CARE INNOVATION*, 2006.

[10] W. Wimmer, H. Schneider, P. Fischer, and A. Pieber. Identification of environmental improvement options with the new ecodesign product investigation, learning and optimization tool (pilot). In *ICED'01: international conference on engineering design*, pages 677–684, 2001.

[11] W. Wimmer and R. Züst. *Ecodesign Pilot: Product-Investigation-, Learning-and Optimization-Tool for Sustainable Product Development.* Kluwer Academic Publishers, 2003.

[12] W. Wimmer, R. Züst, and K.M. Lee. *ECODESIGN implementation: A Systematic Guidance on Integrating Environmental Considerations into Product Development.* Springer, 2004.

Raw materials	Manufacture	Distribution	Use	End of life
Polystyrene	Injection molding	Air	Electricity	Recycling
Glass	Machining	Rail	Batteries	Incineration
Steel	Welding	Road	...	...

Table 1: Five life cycle stages of a product to be considered in LCT

General Ecodesign strategies selected with the PILOT checklists:	*Product design improvements in detail:*
Avoid or reduce the use of problematic materials and components	Reduction of printing width at the top surface foil
Prefer the use of recycled materials (secondary materials)	Increase of the portion of recycled material in the running surface
Reduce material input by integration of functions	New design of the bond laminate-running surface; the injected foam also provides bonding (no additional adhesive agents)
Use low material input, low emission production technologies	Modification of design for optimized cutting to size of material from wider raw material strips
Avoid waste and emissions in the production process	Less paint coat and reduction of bonding surfaces; reduction of foam waste by redesigning foam injecting nozzle
Close material cycles in the production process	Modification of product design to ensure single material cutting chips, recycling of the chips
Recycle/reuse waste for new materials	Recycling of waste from single material PE running surface
Waste sorting/separation whenever possible	Modification of the bond between laminate and PE running surface
etc.	etc.

Table 2: Ecodesign strategies and design improvements for the alpine ski

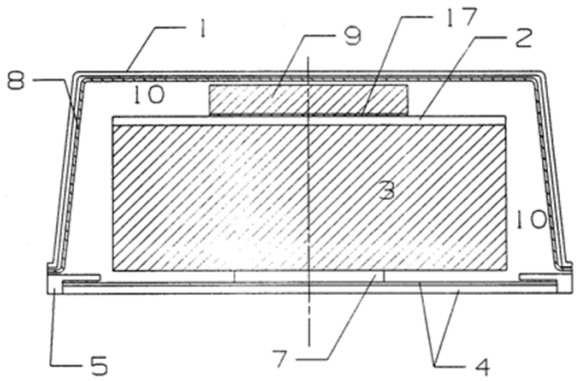

Figure 1: Cross section of an alpine ski [10]

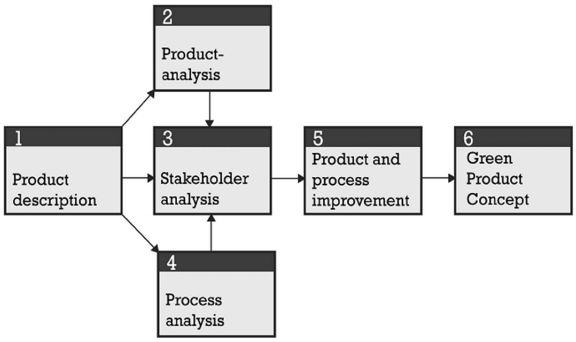

Figure 2: Digital pocket memo reference product

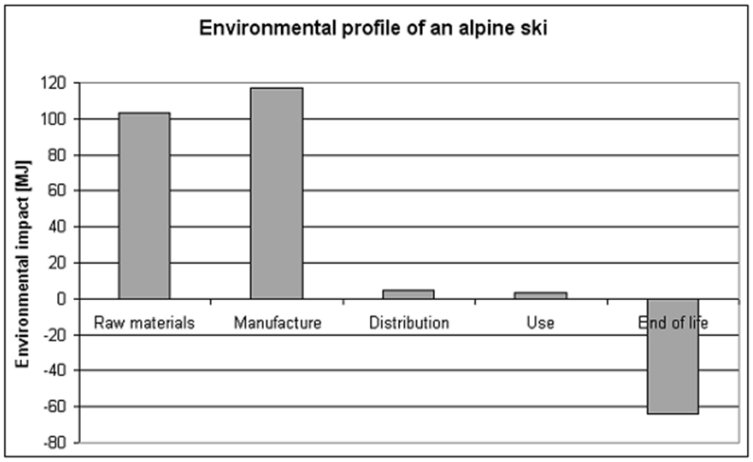

Figure 3: Product description of Digital Pocket Memo

Figure 4: Six steps for developing green product concepts - ECODESIGN Toolbox (2007c)

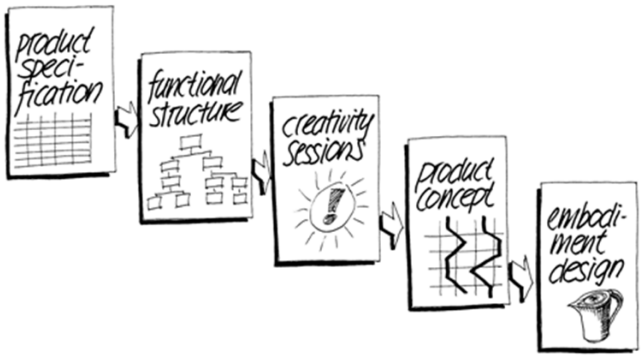

Figure 5: Product analysis - [6]

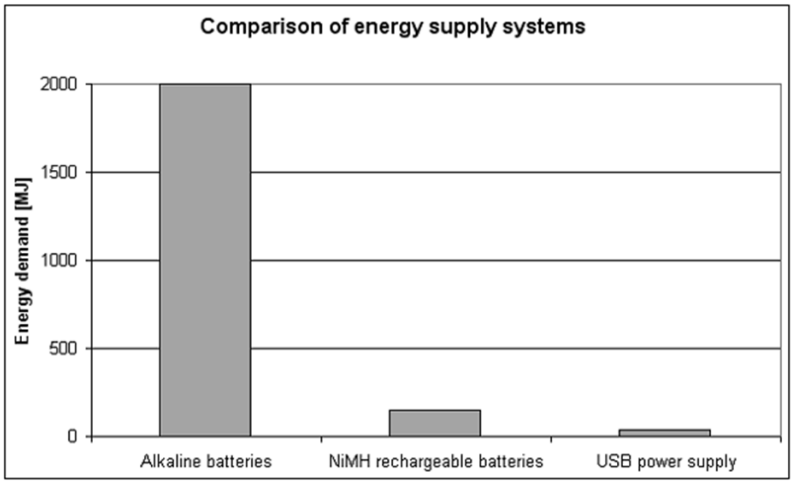

Figure 6: Environmental profile of the reference alpine ski

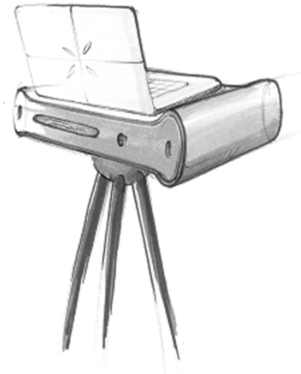

Figure 7: Environmental profile of the reference Digital Pocket Memo